Day-Brite CFI by signify

Recessed

Selectable backlit panel

Selectable lumens & CCT

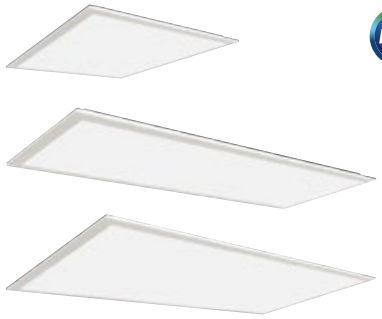

Project:

Location:

Cat.No:

Type:

Lamps: Qty:

Notes:

Day-Brite/CFI Selectable backlit panel is a highly versatile luminaire designed to provide three lumen and three CCT packages per size. Available for use in recessed and surface mount applications, the SBP is a versatile luminaire that is ideal for general lighting applications such as open office, schools, healthcare, and retail.

Lumen Select Switch

CCT Select Switch

			Power/Wattage			Lumens			Efficacy		
Catalog Code	Size	Voltage	3500K	4000K	5000K	3500K	4000K	5000K	3500K	4000K	5000K
1SBP3040L8CS-4-UNV-DIM	1x4	120-277	31	29	30	3483	3640	3464	114	125	114
			34	33	34	3841	4047	3824	112	123	111
			37	36	39	4293	4443	4167	117	122	108
2SBP3040L8CS-2-UNV-DIM	2x2	120-277	30	28	30	3260	3434	3296	110	121	111
			33	32	33	3597	3819	3641	108	119	109
			39	36	37	4247	4207	4006	110	117	107
2SBP3550L8CS-4-UNV-DIM	2x4	120-277	34	33	35	4138	4260	4149	121	128	119
			38	37	39	4570	4718	4566	119	127	117
			51	47	50	5697	5847	5548	111	124	110
1SBP3040L8CS-4-UN3-DIM	1x4	120-347	31	29	30	3483	3640	3464	114	125	114
			34	33	34	3841	4047	3824	112	123	111
			37	36	39	4293	4443	4167	117	122	108
2SBP3040L8CS-2-UN3-DIM	2x2	120-347	30	28	30	3260	3434	3296	110	121	111
			33	32	33	3597	3819	3641	108	119	109
			39	36	37	4247	4207	4006	110	117	107
2SBP3550L8CS-4-UN3-DIM	2x4	120-347	34	33	35	4138	4260	4149	121	128	119
			38	37	39	4570	4718	4566	119	127	117
			51	47	50	5697	5847	5548	111	124	110

Accessories (order separately)

- **FPEM-BSL310RM** [1] **–** 10W Emergency Driver Kit - Field installed
- **FMA14FP – 1'x4' "F" mounting frame for NEMA "F" mounting**
- **FSF14 –** 1'x4' surface mount field assembly kit (field assembled)
- **FMA22 –** 2'x2' "F" mounting frame for NEMA "F" mounting
- **FSK22 –** 2'x2' surface mount field installation kit(factory welded seams)
- **FSF22 –** 2'x2' surface mount field assembly kit (field assembled)
- **FMA24 –** 2'x4' "F" mounting frame for NEMA "F" mounting
- **FSK24 –** 2'x4' surface mount field installation kit (factory welded seams)
- **FSF24 –** 2'x4' surface mount field assembly kit (field assembled)

1. Not available with UN3 driver option.

SBP Options[1]

- **1SBP3040L8CS-4-UNV-DIM-BSL310RM –** 10W Emergency Driver, Installed
- **2SBP3040L8CS-2-UNV-DIM-BSL310RM –** 10W Emergency Driver, Installed
- **3SBP3550L8CS-4-UNV-DIM-BSL310RM –** 10W Emergency Driver, Installed

Not all product variations listed on this page are DLC qualified. To ensure that a specific model is qualified, visit www.designlights.org/search

RoHS COMPLIANT

1SBP/2SBP Selectable backlit panel

Selectable lumens and CCT

Application

- Overall 1-1/2" deep luminaire, including driver box, provides minimal intrusion into the plenum space.
- Even distribution of light on the lens provides exceptionally low glare gradient minimizing distractions at the ceiling plane.
- General light distribution creates uniform horizontal and vertical illuminance on the work plane and limits scalloping on the walls.
- Excellent consistency of correlated color temperature (CCT) per ANSI C78.377.
- CRI 80 minimum color rendering with balanced spectrum.
- Designed for use with standard Grid (NEMA "G") or Narrow Grid (NEMA "NFG") ceiling T-bars. Drywall or plaster application require use with the FMA "F" mounting frame accessory (sold and shipped separately).
- Accessory field install kits available for surface (FSK and FSF) mounting.

Construction/Finish

- Extruded aluminum frame post painted with gloss white enamel finish. Corners are precision welded for seamless aesthetic.
- Die formed driver box with standard access plate for ease of wiring, provides tool-free access to driver(s) from above.
- Back lit LED arrays with optics provide highly efficient and unpixilated transfer of light to the lens.
- Integral clips accommodate definitive attachment to T-bar grid for recessed applications.
- Die formed surface box accessory kit post painted gloss white enamel.

Field Selectable CCT and Wattage

- CCT can easily be selected in the field between 5000K(CW); 4000K(NW);3500K(WW)
- Wattage selection allows for easy field selection between three lumen packages (see performance chart for details)
- Factory default settings noted in image below:

Enclosure

- Diffuser provides visual comfort and high efficiency.
- Flat opal lens is easy to clean and provides a uniform aesthetic on the ceiling plane.
- Tight enclosure assembly impedes ingress of dust and insects.

Electrical

- Up to 128 lm/W efficacy.
- Driver featuring high power factor (>0.90), 120-277V 60/50Hz, and less than 15% THD.
- Minimum start temperature -20°C (-4°F).
- Standard configurations are 0-10V dimming to 5%.
- Electromagnetic interference (EMI) compliant to FCC Title 47 Part 15 class A.
- Flicker and stroboscopic effect compliant to NEMA 77-2017.
- TM-21 predicted L70 lumen maintenance up to 67,000 hours per LED manufacturer LM-80 report.
- cULus listed to UL and CSA standards, suitable for damp locations.
- Non-IC rated.
- To predict lumen output in emergency mode,multiply emergency pack wattage by luminiare efficacy, then by 1.10. Typical lumen output is 1200lm for BSL310
- Rated for clean room use - meets ISO14644-1 Class 5-9 (equivalent to Federal Standard No. 209E Class 100-100,000)
- Selectable backlit panel luminaires are Designlights Consortium® qualified. Please see the DLC QPL list for exact catalog numbers www.designlights.org/QPL.

General Notes

- All accessories are field installed.
- All options are factory installed.
- Many luminaire components, such as reflectors, refractors, lenses, sockets, lampholders, and LEDs are made from various types of plastics which can be adversely affected by airborne contaminants. If sulfur based chemicals, petroleum based products, cleaning solutions, or other contaminants are expected in the intended area of use, consult factory for compatibility.
- Five year limited luminaire warranty includes LED boards and driver. Visit www.signify.com/warranties for complete warranty information.

1SBP/2SBP Selectable backlit panel

Selectable lumens and CCT

Standard Configurations

Dimensions

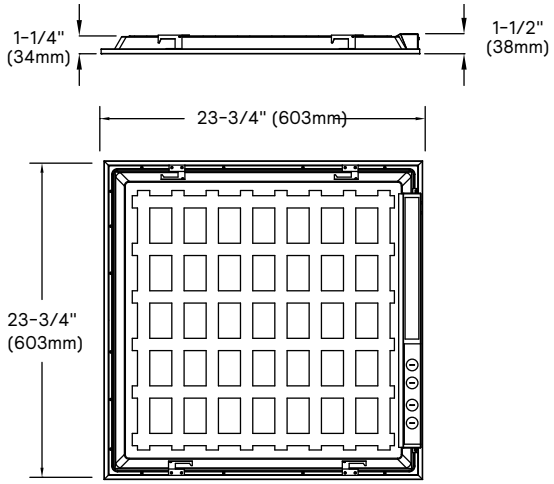

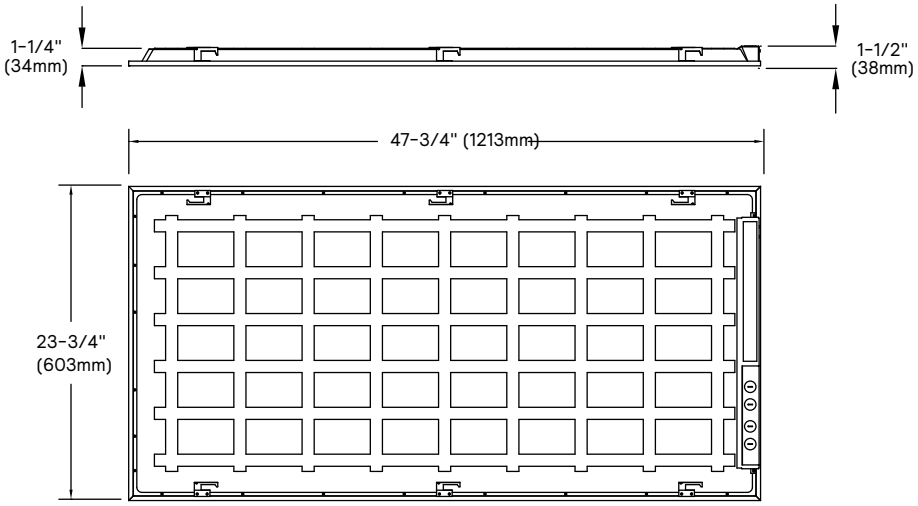

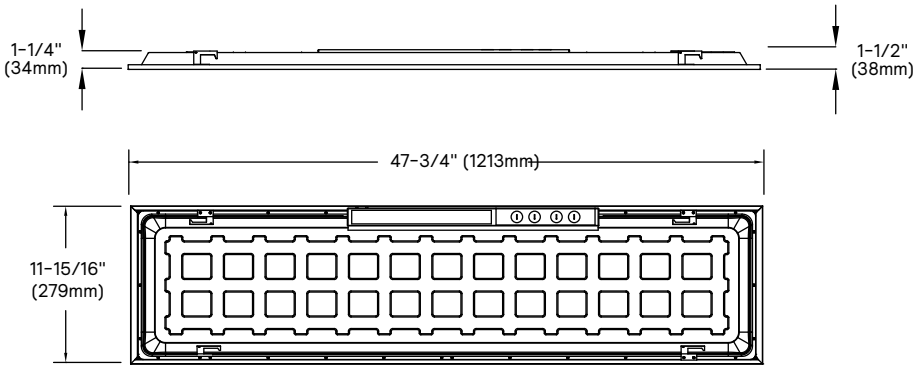

1SBP/2SBP Selectable backlit panel

Selectable lumens and CCT

Emergency Configurations

Dimensions

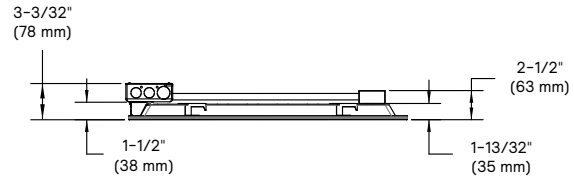

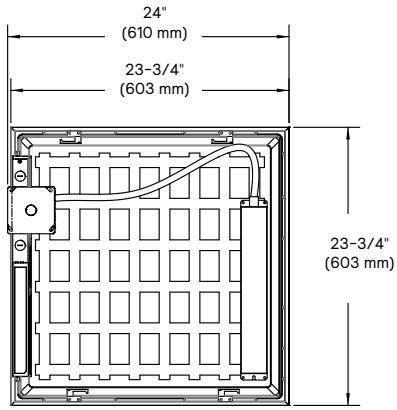

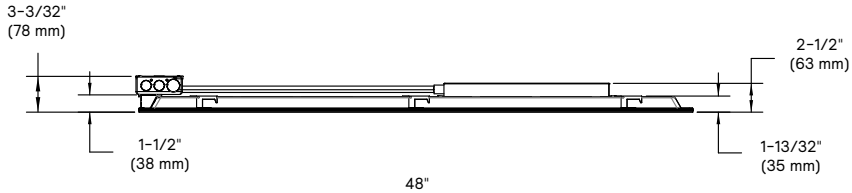

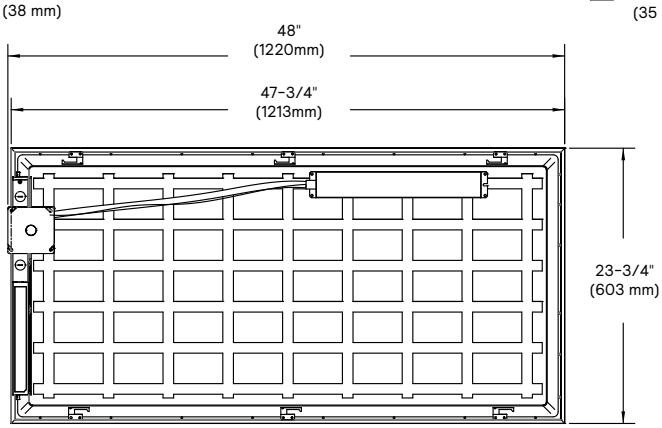

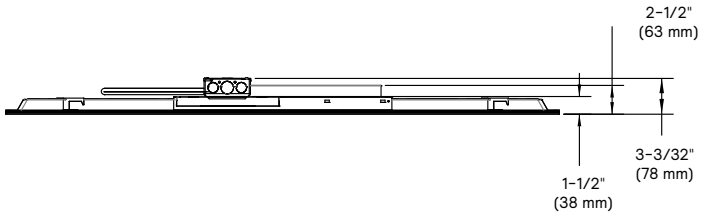

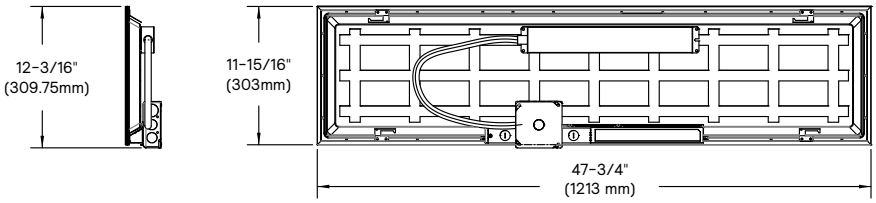

1SBP/2SBP Selectable backlit panel

Selectable lumens and CCT

Photometry

1SBP3040L8CS-4-UNV-DIM 4000K

Luminaire Lumens	4095
Luminaire Efficacy Rating (LER)	125
Total Luminaire Watts	32.8
Spacing Criterion (0-180)	1.27

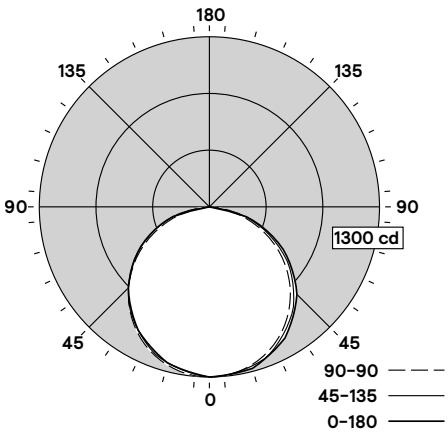

Candela Distribution						Flux
	0	22.5	45	67.5	90	Lumens
0	1389	1389	1389	1389	1389	
5	1382	1385	1390	1396	1396	132
15	1337	1341	1345	1353	1352	380
25	1247	1251	1256	1262	1262	579
35	1116	1119	1124	1127	1125	703
45	948	950	955	956	955	735
55	747	749	751	750	749	669
65	516	518	519	520	520	513
75	279	280	281	281	281	297
85	75	76	77	77	76	87
90	3	4	4	4	5	

Zonal Lumen Summary			
Zone	Lumens	%Fixture	%Lamp
0-30	1091	26.7%	26.7%
0-40	1794	43.8%	43.8%
0-60	3198	78.1%	78.1%
0-90	4095	100.0%	100.0%
0-180	4095	100.0%	100.0%

Avg. Luminance (cd/m²)			
	0	90	180
0	4836	4836	4836
5	4828	4855	4879
15	4817	4848	4872
25	4790	4824	4846
35	4741	4778	4782
45	4664	4702	4702
55	4531	4554	4543
65	4250	4274	4282
75	3748	3774	3774
85	2993	3070	3032

Coefficients of Utilization %											
Pc---	80				70			50			0
Pw---	70	50	30	10	70	50	30	50	30	10	0
RCR											
0	119	119	119	119	116	116	116	111	111	111	100
1	109	104	99	95	106	101	97	97	94	91	83
2	99	90	83	77	96	88	82	85	79	75	69
3	90	79	71	64	87	77	70	74	68	62	58
4	82	70	61	54	80	68	60	66	59	53	49
5	75	62	53	46	73	61	53	59	51	46	43
6	70	56	47	40	68	55	47	53	46	40	37
7	64	51	42	36	63	50	42	48	41	35	33
8	60	46	38	32	58	46	37	44	37	31	29
9	56	42	34	29	55	42	34	41	33	28	26
10	52	39	31	26	51	39	31	38	31	26	24

2SBP3040L8CS-2-UNV-DIM 4000K

Luminaire Lumens	3788
Luminaire Efficacy Rating (LER)	118
Total Luminaire Watts	32.0
Spacing Criterion (0-180)	1.26

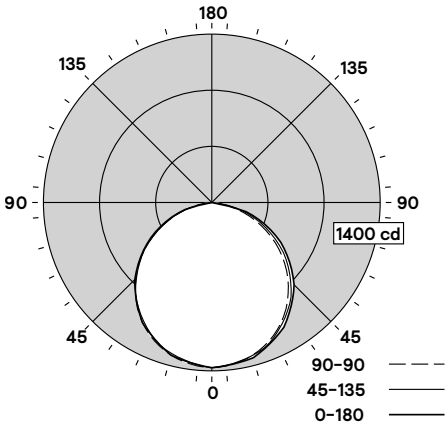

Candela Distribution						Flux
	0	22.5	45	67.5	90	Lumens
0	1313	1313	1313	1313	1313	
5	1307	1306	1306	1306	1306	124
15	1264	1263	1262	1262	1262	356
25	1176	1175	1175	1174	1174	542
35	1050	1049	1047	1047	1048	655
45	888	886	885	884	884	683
55	692	690	690	690	691	617
65	476	475	475	474	475	469
75	253	252	252	252	253	268
85	63	63	63	63	63	74
90	2	2	1	1	1	

Zonal Lumen Summary			
Zone	Lumens	%Fixture	%Lamp
0-30	1022	27.0%	27.0%
0-40	1677	44.3%	44.3%
0-60	2977	78.6%	78.6%
0-90	3788	100.0%	100.0%
0-180	3788	100.0%	100.0%

Avg. Luminance (cd/m²)			
	0	90	180
0	4361	4361	4361
5	4357	4354	4354
15	4345	4338	4338
25	4310	4307	4303
35	4258	4243	4247
45	4170	4157	4152
55	4006	3995	4001
65	3738	3731	3731
75	3243	3231	3243
85	2417	2417	2417

Coefficients of Utilization %											
Pc---	80				70			50			0
Pw---	70	50	30	10	70	50	30	50	30	10	0
RCR											
0	119	119	119	119	116	116	116	111	111	111	100
1	109	104	99	96	106	102	98	97	94	91	84
2	99	90	83	78	96	88	82	85	80	75	69
3	90	79	71	64	87	78	70	75	68	63	58
4	82	70	61	54	80	69	60	66	59	53	50
5	76	63	54	47	73	61	53	59	52	46	43
6	70	56	47	41	68	55	47	54	46	40	37
7	65	51	42	36	63	50	42	49	41	36	33
8	60	47	38	32	59	46	38	44	37	32	29
9	56	43	34	29	55	42	34	41	34	29	26
10	53	39	31	26	51	39	31	38	31	26	24

1SBP/2SBP Selectable backlit panel

Selectable lumens and CCT

2SBP3550L8CS-4-UNV-DIM 4000K

Luminaire Lumens	4721
Luminaire Efficacy Rating (LER)	127
Total Luminaire Watts	37.2
Spacing Criterion (0-180)	1.27

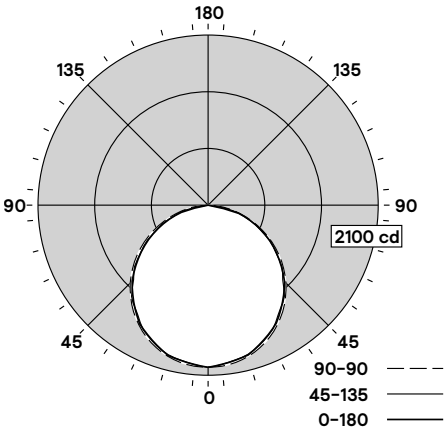

Candela Distribution						Flux
	0	22.5	45	67.5	90	Lumens
0	1628	1628	1628	1628	1628	
5	1619	1620	1624	1627	1629	154
15	1566	1567	1571	1574	1575	443
25	1461	1463	1466	1467	1467	675
35	1302	1304	1306	1306	1307	817
45	1099	1100	1101	1102	1103	850
55	865	864	863	863	862	771
65	594	593	593	593	592	586
75	316	315	314	313	311	334
85	80	80	79	78	77	92
90	3	3	3	3	3	

Zonal Lumen Summary			
Zone	Lumens	%Fixture	%Lamp
0-30	1273	27.0%	27.0%
0-40	2089	44.3%	44.3%
0-60	3709	78.6%	78.6%
0-90	4721	100.0%	100.0%
0-180	4721	100.0%	100.0%

Avg. Luminance (cd/m²)			
	0	90	180
0	2582	2582	2582
5	2577	2585	2593
15	2571	2579	2586
25	2556	2564	2566
35	2521	2528	2530
45	2465	2470	2474
55	2391	2386	2383
65	2228	2225	2221
75	1937	1925	1908
85	1451	1434	1399

Coefficients of Utilization %											
Pc---	80				70			50			0
Pw---	70	50	30	10	70	50	30	50	30	10	0
RCR											
0	119	119	119	119	116	116	116	111	111	111	100
1	109	104	99	96	106	102	98	97	94	91	83
2	99	90	83	78	96	88	82	85	80	75	69
3	90	79	71	64	87	78	70	75	68	63	58
4	82	70	61	54	80	69	60	66	59	53	50
5	76	63	53	47	73	61	53	59	52	46	43
6	70	56	47	41	68	55	47	54	46	40	37
7	65	51	42	36	63	50	42	49	41	36	33
8	60	46	38	32	59	46	38	44	37	32	29
9	56	43	34	29	55	42	34	41	34	29	26
10	53	39	31	26	51	39	31	38	31	26	24

1SBP3040L8CS-4-UN3-DIM 4000K

Luminaire Lumens	4095
Luminaire Efficacy Rating (LER)	125
Total Luminaire Watts	32.8
Spacing Criterion (0-180)	1.27

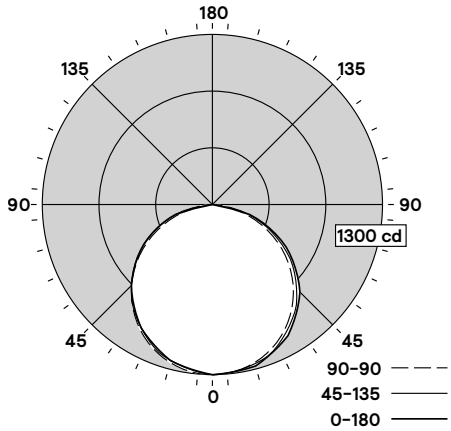

Candela Distribution						Flux
	0	22.5	45	67.5	90	Lumens
0	1389	1389	1389	1389	1389	
5	1382	1385	1390	1396	1396	132
15	1337	1341	1345	1353	1352	380
25	1247	1251	1256	1262	1262	579
35	1116	1119	1124	1127	1125	703
45	948	950	955	956	955	735
55	747	749	751	750	749	669
65	516	518	519	520	520	513
75	279	280	281	281	281	297
85	75	76	77	77	76	87
90	3	4	4	4	5	

Zonal Lumen Summary			
Zone	Lumens	%Fixture	%Lamp
0-30	1091	26.7%	26.7%
0-40	1794	43.8%	43.8%
0-60	3198	78.1%	78.1%
0-90	4095	100.0%	100.0%
0-180	4095	100.0%	100.0%

Avg. Luminance (cd/m²)			
	0	90	180
0	4836	4836	4836
5	4828	4855	4879
15	4817	4848	4872
25	4790	4824	4846
35	4741	4778	4782
45	4664	4702	4702
55	4531	4554	4543
65	4250	4274	4282
75	3748	3774	3774
85	2993	3070	3032

Coefficients of Utilization %											
Pc---	80				70			50			0
Pw---	70	50	30	10	70	50	30	50	30	10	0
RCR											
0	119	119	119	119	116	116	116	111	111	111	100
1	109	104	99	95	106	101	97	97	94	91	83
2	99	90	83	77	96	88	82	85	79	75	69
3	90	79	71	64	87	77	70	74	68	62	58
4	82	70	61	54	80	68	60	66	59	53	49
5	75	62	53	46	73	61	53	59	51	46	43
6	70	56	47	40	68	55	47	53	46	40	37
7	64	51	42	36	63	50	42	48	41	35	33
8	60	46	38	32	58	46	37	44	37	31	29
9	56	42	34	29	55	42	34	41	33	28	26
10	52	39	31	26	51	39	31	38	31	26	24

1SBP/2SBP Selectable backlit panel

Selectable lumens and CCT

2SBP3040L8CS-2-UN3-DIM 4000K

Luminaire Lumens	3788
Luminaire Efficacy Rating (LER)	118
Total Luminaire Watts	32.0
Spacing Criterion (0-180)	1.26

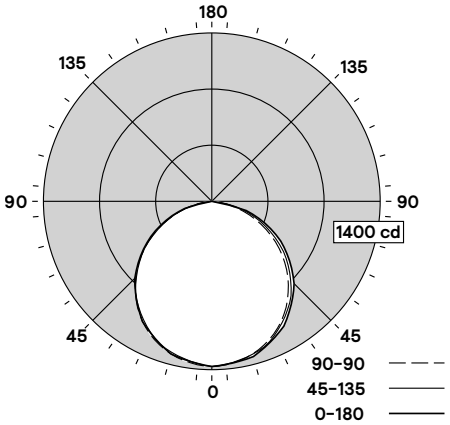

Candela Distribution						Flux
	0	22.5	45	67.5	90	Lumens
0	1313	1313	1313	1313	1313	
5	1307	1306	1306	1306	1306	124
15	1264	1263	1262	1262	1262	356
25	1176	1175	1175	1174	1174	542
35	1050	1049	1047	1047	1048	655
45	888	886	885	884	884	683
55	692	690	690	690	691	617
65	476	475	475	474	475	469
75	253	252	252	252	253	268
85	63	63	63	63	63	74
90	2	2	1	1	1	

Zonal Lumen Summary			
Zone	Lumens	%Fixture	%Lamp
0-30	1022	27.0%	27.0%
0-40	1677	44.3%	44.3%
0-60	2977	78.6%	78.6%
0-90	3788	100.0%	100.0%
0-180	3788	100.0%	100.0%

Avg. Luminance (cd/m²)			
	0	90	180
0	4361	4361	4361
5	4357	4354	4354
15	4345	4338	4338
25	4310	4307	4303
35	4258	4243	4247
45	4170	4157	4152
55	4006	3995	4001
65	3738	3731	3731
75	3243	3231	3243
85	2417	2417	2417

Coefficients of Utilization %											
Pc---	80				70			50			0
Pw---	70	50	30	10	70	50	30	50	30	10	0
RCR											
0	119	119	119	119	116	116	116	111	111	111	100
1	109	104	99	96	106	102	98	97	94	91	84
2	99	90	83	78	96	88	82	85	80	75	69
3	90	79	71	64	87	78	70	75	68	63	58
4	82	70	61	54	80	69	60	66	59	53	50
5	76	63	54	47	73	61	53	59	52	46	43
6	70	56	47	41	68	55	47	54	46	40	37
7	65	51	42	36	63	50	42	49	41	36	33
8	60	47	38	32	59	46	38	44	37	32	29
9	56	43	34	29	55	42	34	41	34	29	26
10	53	39	31	26	51	39	31	38	31	26	24

2SBP3550L8CS-4-UN3-DIM 4000K

Luminaire Lumens	4721
Luminaire Efficacy Rating (LER)	127
Total Luminaire Watts	37.2
Spacing Criterion (0-180)	1.27

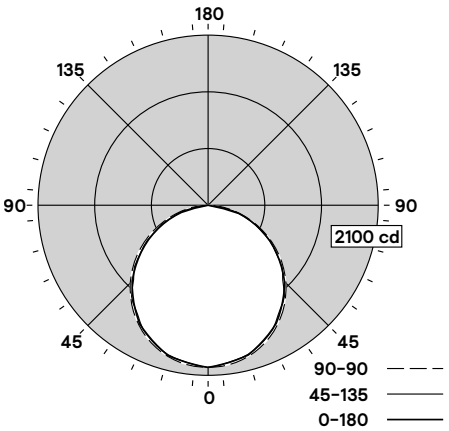

Candela Distribution						Flux
	0	22.5	45	67.5	90	Lumens
0	1628	1628	1628	1628	1628	
5	1619	1620	1624	1627	1629	154
15	1566	1567	1571	1574	1575	443
25	1461	1463	1466	1467	1467	675
35	1302	1304	1306	1306	1307	817
45	1099	1100	1101	1102	1103	850
55	865	864	863	863	862	771
65	594	593	593	593	592	586
75	316	315	314	313	311	334
85	80	80	79	78	77	92
90	3	3	3	3	3	

Zonal Lumen Summary			
Zone	Lumens	%Fixture	%Lamp
0-30	1273	27.0%	27.0%
0-40	2089	44.3%	44.3%
0-60	3709	78.6%	78.6%
0-90	4721	100.0%	100.0%
0-180	4721	100.0%	100.0%

Avg. Luminance (cd/m²)			
	0	90	180
0	2582	2582	2582
5	2577	2585	2593
15	2571	2579	2586
25	2556	2564	2566
35	2521	2528	2530
45	2465	2470	2474
55	2391	2386	2383
65	2228	2225	2221
75	1937	1925	1908
85	1451	1434	1399

Coefficients of Utilization %											
Pc---	80				70			50			0
Pw---	70	50	30	10	70	50	30	50	30	10	0
RCR											
0	119	119	119	119	116	116	116	111	111	111	100
1	109	104	99	96	106	102	98	97	94	91	83
2	99	90	83	78	96	88	82	85	80	75	69
3	90	79	71	64	87	78	70	75	68	63	58
4	82	70	61	54	80	69	60	66	59	53	50
5	76	63	53	47	73	61	53	59	52	46	43
6	70	56	47	41	68	55	47	54	46	40	37
7	65	51	42	36	63	50	42	49	41	36	33
8	60	46	38	32	59	46	38	44	37	32	29
9	56	43	34	29	55	42	34	41	34	29	26
10	53	39	31	26	51	39	31	38	31	26	24

signify

© 2022 Signify Holding. All rights reserved. The information provided herein is subject to change, without notice. Signify does not give any representation or warranty as to the accuracy or completeness of the information included herein and shall not be liable for any action in reliance thereon. The information presented in this document is not intended as any commercial offer and does not form part of any quotation or contract, unless otherwise agreed by Signify.

Signify North America Corporation
400 Crossing Blvd, Suite 600
Bridgewater, NJ 08807
Telephone: 855-486-2216

Signify Canada Ltd.
281 Hillmount Road,
Markham, ON, Canada L6C 2S3
Telephone: 800-668-9008

All trademarks are owned by Signify Holding or their respective owners.